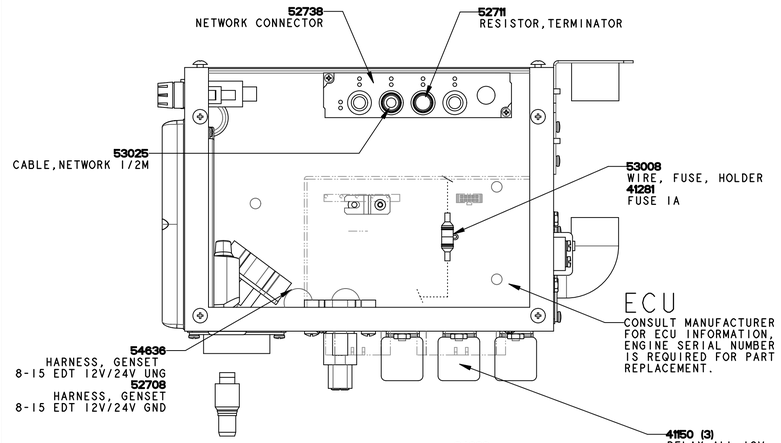

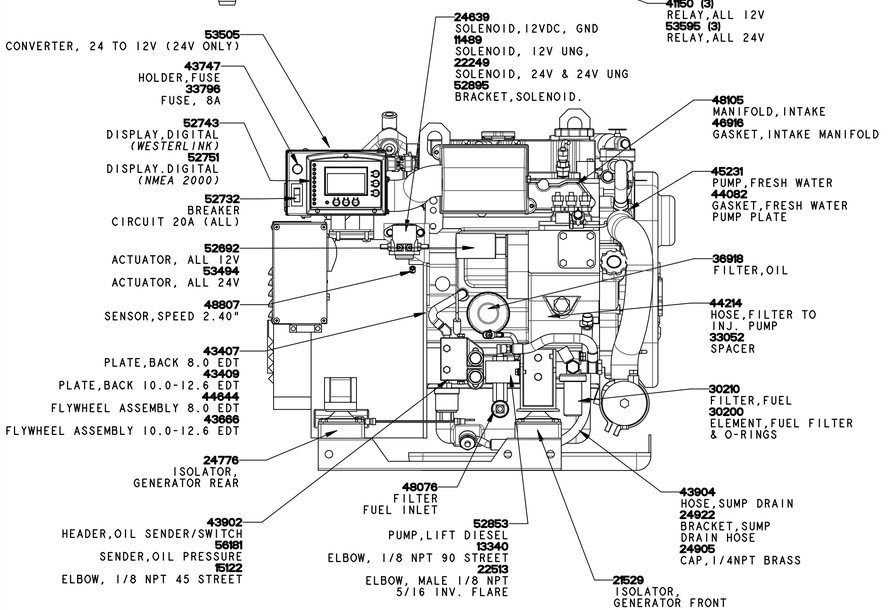

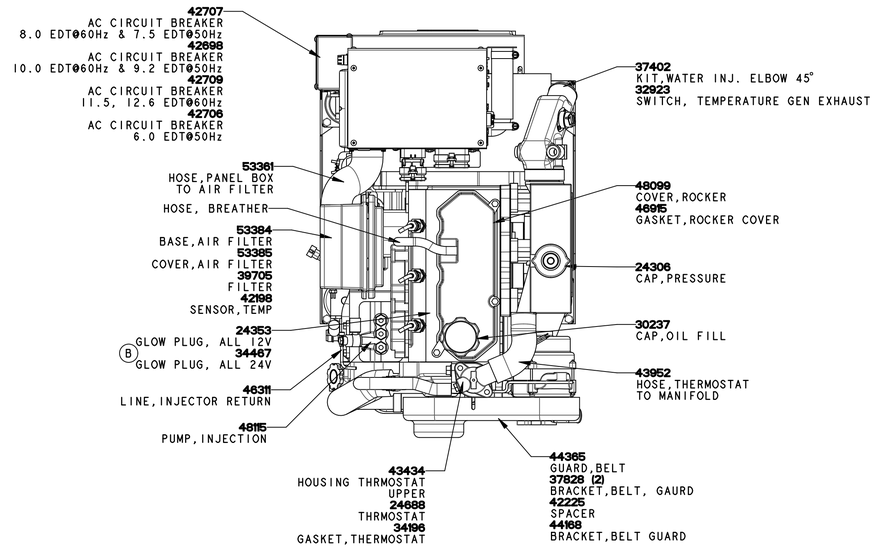

P/N	DESCRIPTION
53060	MANUAL,OPERATOR 8-15 EDT
54600	MANUAL,SERVICE 8-15 EDT
52793	WIRING DIAGRAM
46420	KIT A
47157	KIT B
46901	GASKET SET COMPLETE
46900	GASKET SET UPPER

NOTE:
1) REFER TO 42719 FOR AC WIRE SCHEMATIC
2) UNG= UNGROUNDED DC
3) GND= GROUNDED DC (MOST COMMON)

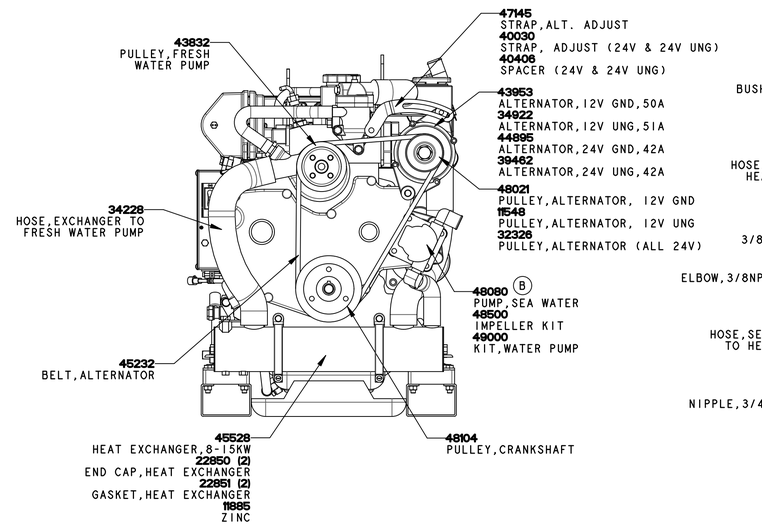

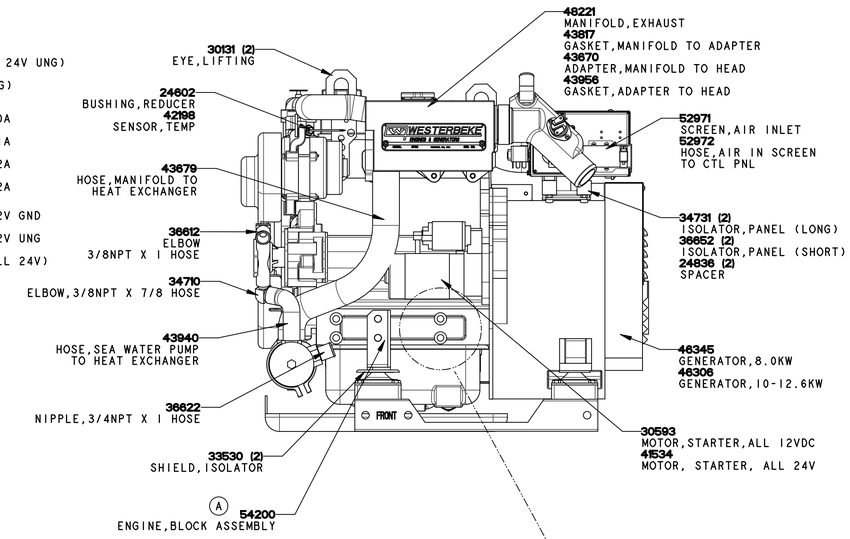

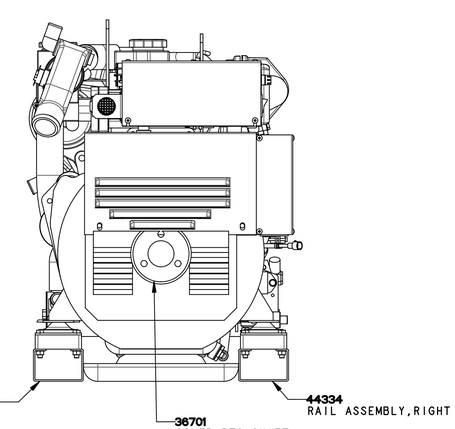

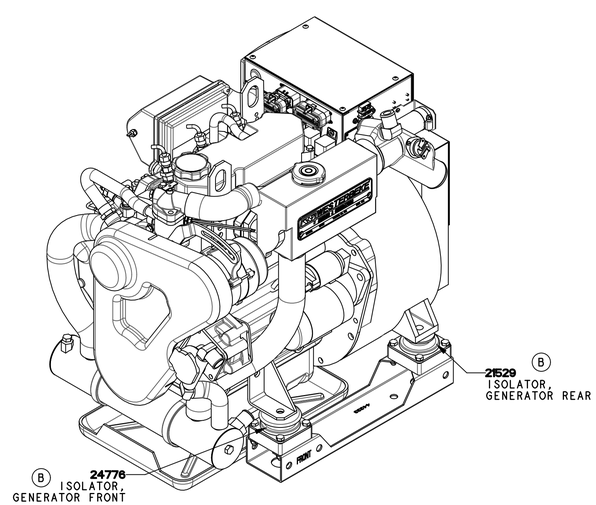

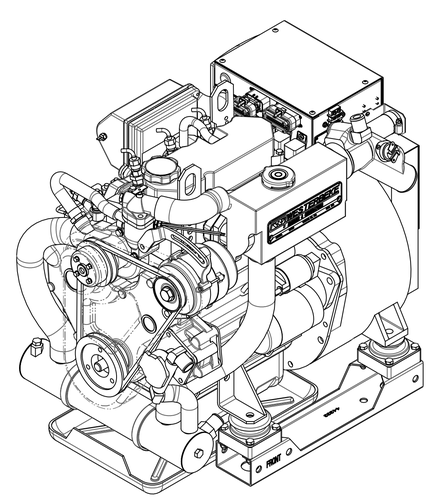

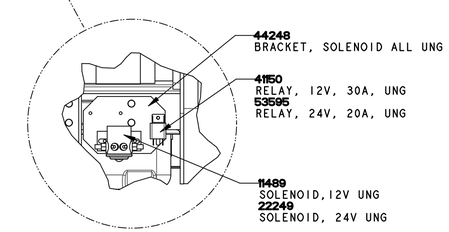

(UNGROUNDED DC SYSTEMS ONLY)
(VIEW WITH UNG COMPONENTS SHOWN SEPARATE)

TOLERANCES (UNLESS OTHERWISE NOTED)		WESTERBEKE		
INCHES: .XX ±.02, .XXX ±.005, CAST ±.03, ANGLES ±.5, FINISH 63	MILLIMETERS: X. ± 1.0, .X ± .5, .XX ± .13	TITLE: PARTLIST DRAWING 8.0-11.5 EDT, 12.6 EDT		
DIMENSIONS INCHES / MILLIMETERS (WHEN APPLICABLE)		DRAWN BY: GA	DATE: 16/Apr/07	MATERIAL: --- --- ---
		APPROVED BY	DATE	
		SCALE 0.188	SIZE: D	DRAWING NUMBER: 52897
		SHT. 1 OF 1		REV. D